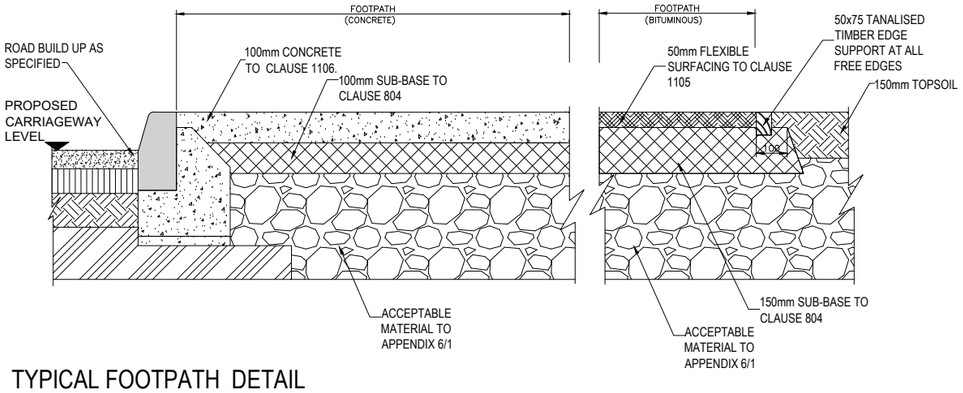


## TYPICAL FOOTPATH DETAIL

Scale 1:20 @ A3

PC KERB NOTES:

01. AT VEHICULAR ACCESS POINTS, CONCRETE TO BE REINFORCED WITH A393 MESH-TOP & BOTTOM.

02. ALL CONCRETE EDGES & JOINTS SHALL BE BULLNOZED WITH A TROWEL

03. PRECAST KERBS SHALL BE LAID & LEVELLED IN ACCORDANCE WITH BS 7533:PART

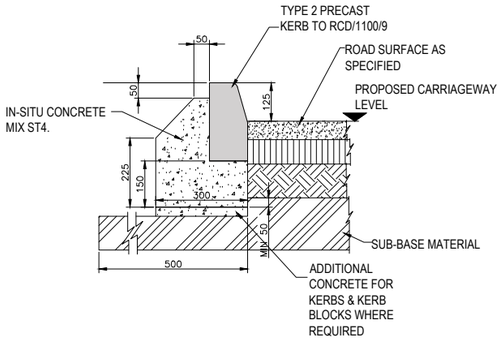


## TYPICAL PC KERB DETAIL

Scale 1:20 @ A3

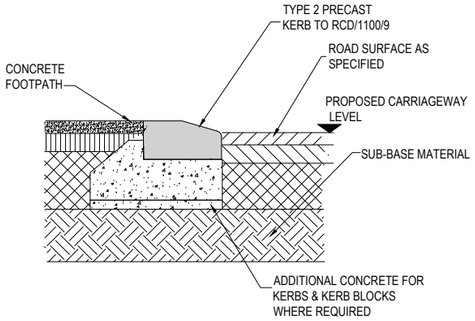


## TYPICAL PC DROPPED KERB DETAIL

Scale 1:20 @ A3

| Rev | Sts | Description | Date |
|---|---|---|---|
| P01 | S2 | Issued for Planning | 23.06.20 |
| P02 | S2 | Issued for Planning | 15.07.22 |
| P03 | S2 | Issued for Planning | 27.09.23 |
| P04 | S2 | Issued for Planning | 14.06.24 |

MMOS
MURPHY · MATSON · O'SULLIVAN
CONSULTING CIVIL & STRUCTURAL ENGINEERS
The Chapel,
Blackrock House,
Blackrock Road
Cork, T12 KRK7
Tel : 353 21 4317608

PROJECT
Proposed Development at Courtstown, Little Island, Co. Cork

CLIENT
Ruden Homes Ltd.

TITLE
Typical Road Details Sheet 2 of 2

| DRAWN BY | CHECKED BY | APPROVED BY |
|---|---|---|
| A.R. | P.M. | P.M. |

| SCALE | PROJECT NUMBER |
|---|---|
| As Shown | 20093 |

DOCUMENT REFERENCE
20093-MMS-ZZ-DR-C-10022
PROJECT-ORIGINATOR-ZONE-LEVEL-TYPE-DICIPLINE-NUMBER

STATUS: S2
REV: P04